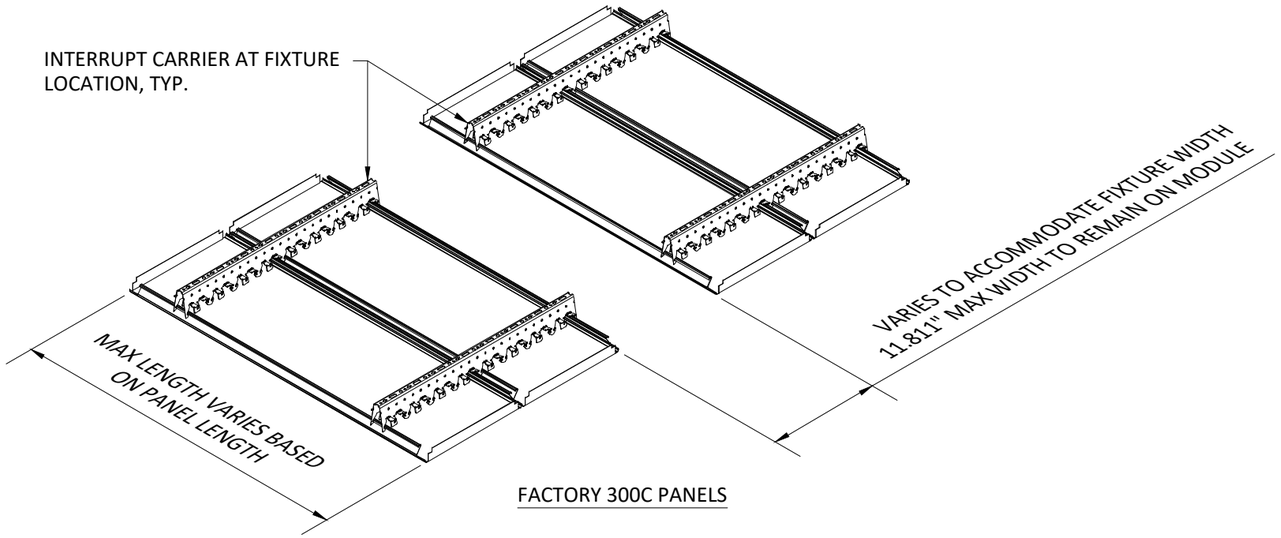

FACTORY 300C PANELS

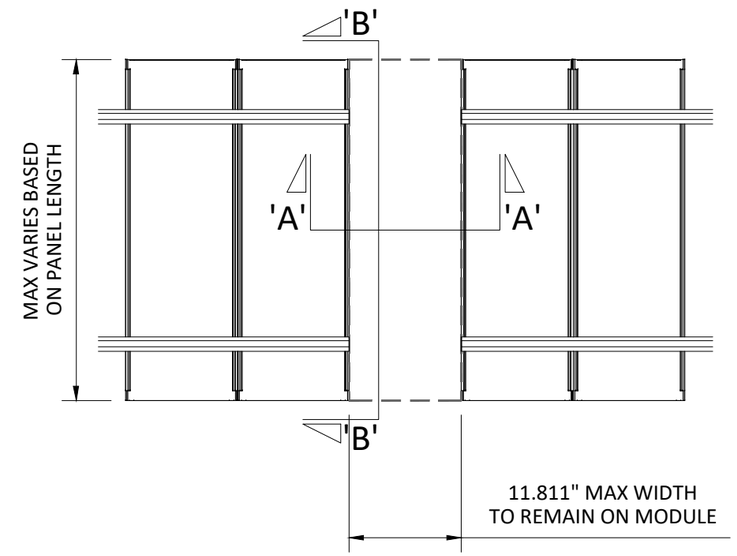

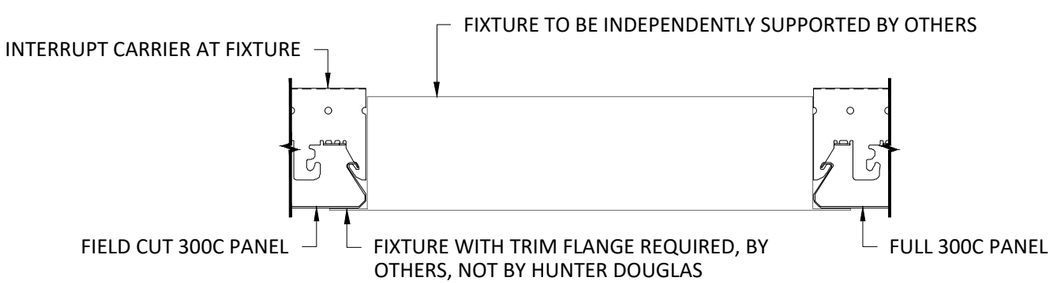

SECTION 'A' - 'A'

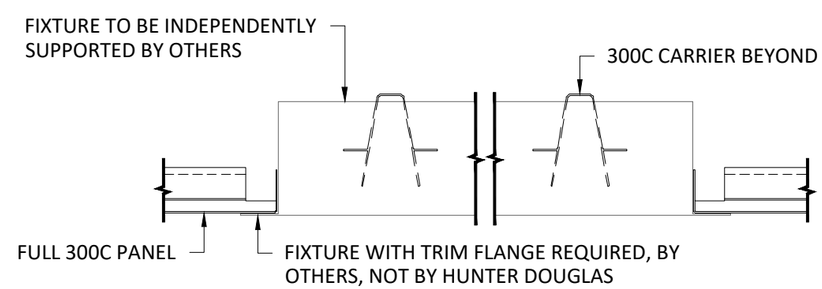

SECTION 'B' - 'B'

NOTE: FIXTURE WITH TRIM FLANGE NOT BY HUNTER DOUGLAS

HunterDouglas Architectural

5015 Oakbrook Parkway, Suite 100
Norcross, GA 30093
T 800.366.4327
F 770.806.0214
HDarchitectural.com

All rights reserved. This drawing is the property of Hunter Douglas. It may not be copied or multiplied, neither wholly nor partly. It may not be submitted for perusal to third parties.

SPECIFICATIONS
(unless noted otherwise)

MATERIAL: .028" ALUMINUM 300C PANEL | .040" ALUMINUM 300C CARRIER
FINISH: PAINT | POWDER COAT | DECORATED WOOD FINISH | WOOD VENEER | LUXACOTE
PERFORATION: NON-PERFORATED | #160

INTERRUPTED PANEL FOR FIXTURE OPENINGS
PROJECT: 300C PRODUCT SPECIFICATIONS
DRAWING NUMBER: 300C-A1.8
SCALE: 3" = 1'-0"
DRAWN BY: HDA ENGINEERING
DATE: 6/28/18